Rover drive controller: STM32F411, 15 A H-bridge, 6 V servo supply

6 sheets: this overview, then one sheet per function. Nets between sheets are global labels; power rails are power symbols.

6 V servo supply and 3.3 V supply

Page 2
- 6 V servo supply
- 6 V servo supply: support parts
- 3.3 V supply

File: board-6-v-servo-supply-and-3-3-v-supply.kicad_sch

SWD (J9) and STM32F411CEU6 (U1)

Page 3
- SWD (J9)
- STM32F411CEU6 (U1)
- STM32F411CEU6 (U1): decoupling

File: board-swd-j9-and-stm32f411ceu6-u1.kicad_sch

STM32F411CEU6 (U1)

Page 4
- STM32F411CEU6 (U1): support parts

File: board-stm32f411ceu6-u1.kicad_sch

Battery input, AON6512 (Q2) and more

Page 5
- Battery input
- AON6512 (Q2)
- AON6512 (Q2): decoupling
- AON6512 (Q3)
- AON6512 (Q4)
  ... 8 blocks

File: board-battery-input-aon6512-q2-and-more.kicad_sch

DRV8701ERGER (U2), IMU and more

Page 6
- DRV8701ERGER (U2): support parts
- IMU
- Servo and ESC outputs
- GPS and console headers
- Status lights

File: board-drv8701erger-u2-imu-and-more.kicad_sch

Power tree

```
VM
    -> U3 TPS54360DDAR -> +6V
        -> FB1 600R@100MHz -> +6V_LDO
            -> U4 AMS1117-3.3 -> +3V3
VREF
    -> R2 10k -> DVDD
```

Generated from the netlist (run/state/circuit_graph.json) - do not edit by hand
Sheet: Overview
faezor PCB

Sheet: /		
File: board.kicad_sch		
Title: Rover drive controller: STM32F411, 15 A H-bridge, 6 V servo supply		
Size: A4	Date: 2026-10-14	**Rev: 1**
KiCad E.D.A. 10.0.6		Id: 1/6

6 V servo supply

A step-down converter that makes a steady 6 V from the battery for the steering servo, up to 3 A.
TPS54360 buck, 8 V–60 V class part running from 6–12.6 V; feedback divider 64.9k/10k gives 5.99 V.
10 uH shielded inductor (SRP7028A, 6 A saturation) and an SS56B catch diode; about 500 kHz from the 200 kOhm RT resistor.
At 40 degC ambient and 3 A the regulator is at about 110 degC junction (verc), under its 150 degC limit.
The servo pin J5.2 is declared at 3 A; the 3.3 V LDO takes its input through a ferrite bead so servo noise stays off the MCU supply.

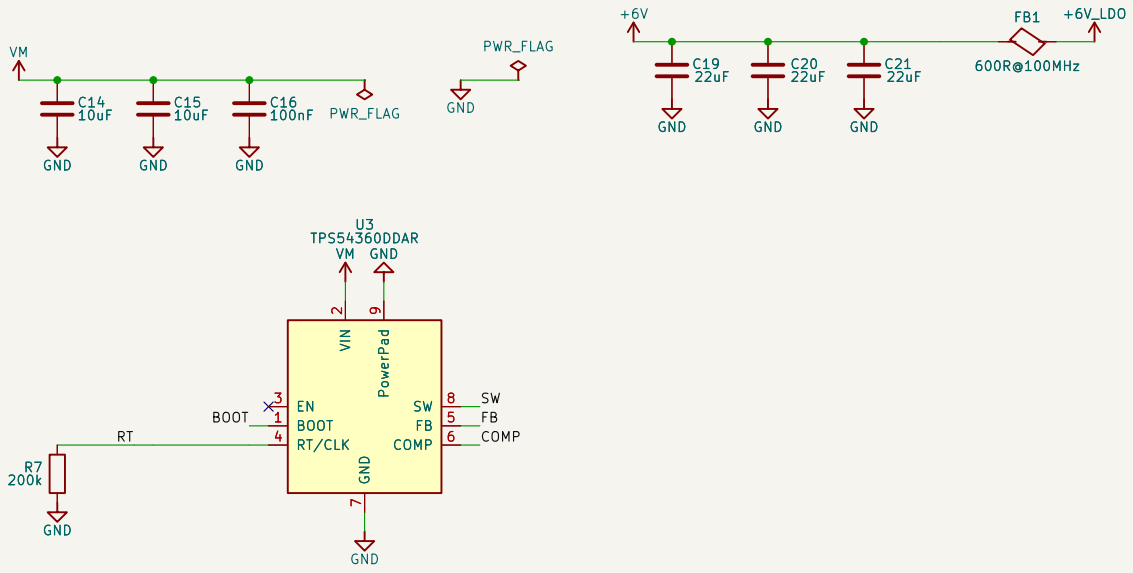

3.3 V supply

Makes the 3.3 V for the chip and sensors from the 6 V rail.
AMS1117-3.3 with a 22 uF tantalum output cap. The 6 V in and 3.3 V out burn 0.4 W; the SOT-223 tab sits on a copper area.

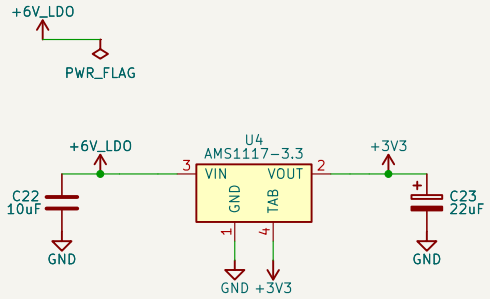

6 V servo supply: support parts

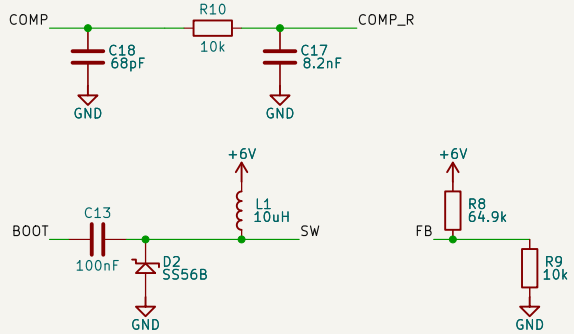

Generated from the netlist (run/state/circuit_graph.json) — do not edit by hand
Sheet: 6 V servo supply and 3.3 V supply
faezor PCB

Sheet: /6 V servo supply and 3.3 V supply/
File: board-6-v-servo-supply-and-3-3-v-supply.kicad_sch

Title: Rover drive controller: STM32F411, 15 A H-bridge, 6 V servo supply

Size: A4	Date: 2026-10-14	**Rev: 1**
KiCad E.D.A. 10.0.6		Id: 2/6

SWD (J9)

The STM32F411 is the brain. It makes the motor, servo and ESC pulses and reads the sensors.
SWD on J9, a 2x5 1.27 mm header (Cortex debug pinout: 1 VTref, 2 SWDIO, 4 SWCLK, 6 SWO, 10 NRST).
BOOT0 jumper: bridge the two test pads TP6 (BOOT0) and TP7 (3V3) with a blob of solder to start the built-in bootloader at reset; normally open (10k pull-down on BOOT0).
No crystal: it runs on its internal clock, enough for PWM and UART.
Chosen as the simulator-tested STM32F4 variant. No analog pins are used, because the simulator has no ADC.

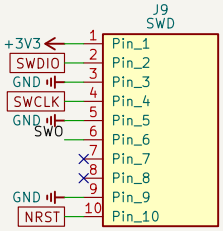

STM32F411CEU6 (U1)

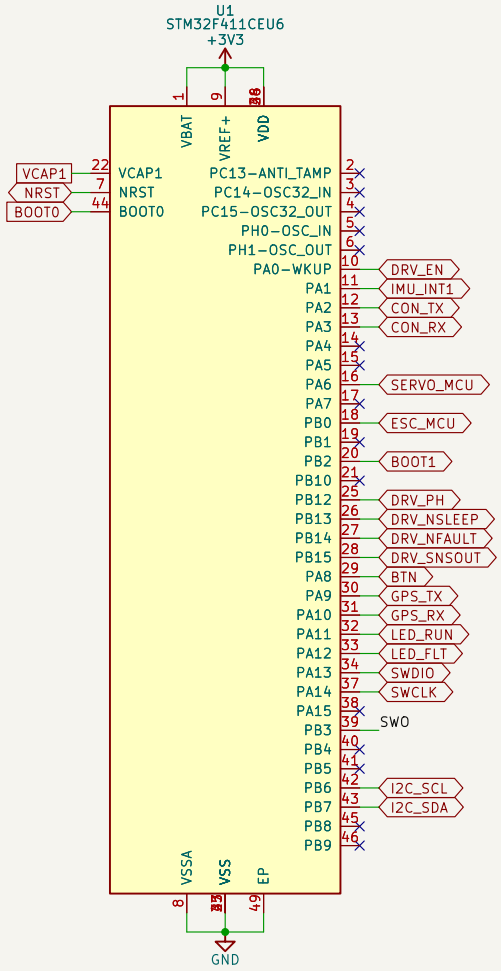

STM32F411CEU6 (U1): decoupling

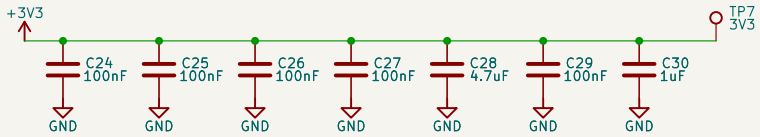

Generated from the netlist (run/state/circuit_graph.json) — do not edit by hand
Sheet: SWD (J9) and STM32F411CEU6 (U1)
faezor PCB

Sheet: /SWD (J9) and STM32F411CEU6 (U1)/
File: board-swd-j9-and-stm32f411ceu6-u1.kicad_sch

Title: Rover drive controller: STM32F411, 15 A H-bridge, 6 V servo supply

Size: A4	Date: 2026-10-14	Rev: 1
KiCad E.D.A. 10.0.6		Id: 3/6

STM32F411CEU6 (U1): support parts

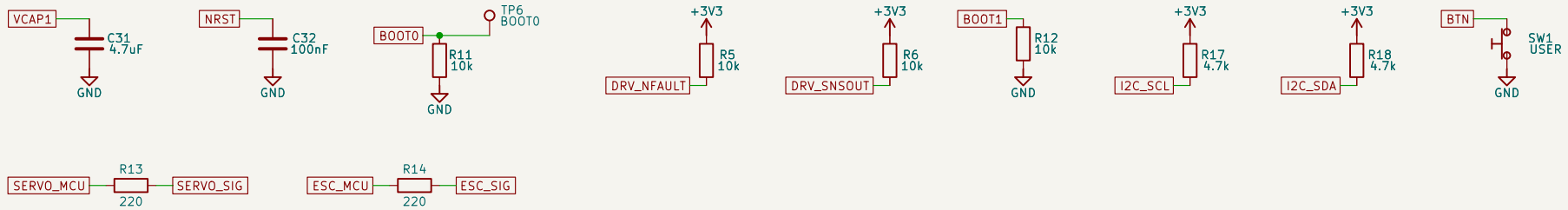

Generated from the netlist (run/state/circuit_graph.json) – do not edit by hand
Sheet: STM32F411CEU6 (U1)
faezor PCB

Sheet: /STM32F411CEU6 (U1)/
File: board–stm32f411ceu6–u1.kicad_sch

Title: Rover drive controller: STM32F411, 15 A H–bridge, 6 V servo supply

Size: A4	Date: 2026–10–14	**Rev: 1**
KiCad E.D.A. 10.0.6		Id: 4/6

Battery input

Two wire pads take the 2S–3S LiPo. A P-channel switch and a clamp diode stop a backwards battery from hurting the board.
Reverse protection – the AON6407 P-FET (4.5 mOhm at 10 V) conducts through its body diode at start-up and the gate is pulled to GND, so it is fully on when the battery is the right way round and blocks when reversed.
SMBJ15A TVS clamps spikes on the motor supply (VRWM 15 V, above the 12.6 V of a full 3S pack).
Battery range 6.0–12.6 V; the DRV8701's undervoltage lockout is 5.6–5.9 V, so a 2S pack should not be run below about 6.0 V.

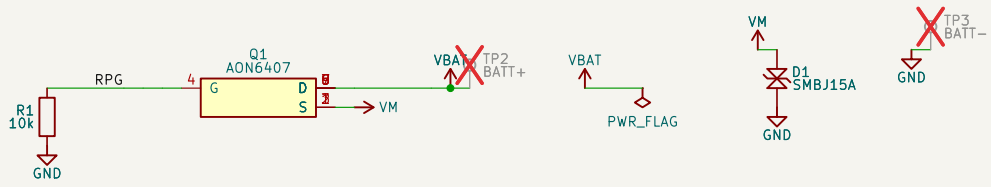

AON6512 (Q2)

Four MOSFETs switch the motor current both ways; the DRV8701 chip drives their gates and limits the current. MOTOR A and B are two wire pads.
Four AON6512 (30 V, 1.7 mOhm at 10 V). 15 A continuous is about 0.8 W in the pair that conducts – fine without a heat sink; the copper pours do the cooling.
1 mOhm shunt (R30, 2512, 3 W) between the low-side sources and GND; the DRV8701 amplifies it 20x and chops the current when VREF is reached.
Cycle-by-cycle limit – VREF is 0.55 V (10k/2k divider from DVDD), so ICHOP = (0.55 V – 0.05 V) / (20 x 1 mOhm) = about 25 A. Change R2/R3 to move it.
IDRIVE has 200 kOhm to GND = 25 mA source / 50 mA sink gate current.
SO (the amplified shunt voltage, 20 mV/A + 50 mV offset) goes to test pad TP1 only – the MCU has no analog input here.
The MCU drives EN (PWM, PA0 TIM2_CH1) and PH (direction); nSLEEP is on a GPIO; nFAULT and SNSOUT (low while chopping) are read by the MCU.

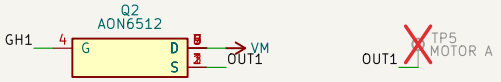

AON6512 (Q2): decoupling

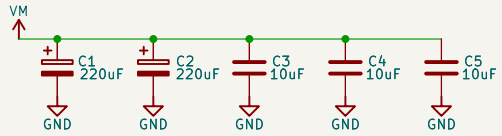

AON6512 (Q3)

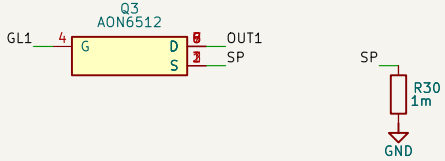

AON6512 (Q4)

AON6512 (Q5)

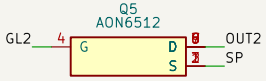

DRV8701ERGER (U2): decoupling

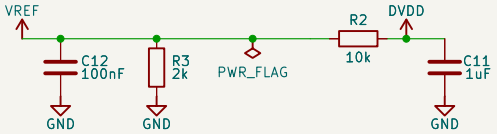

DRV8701ERGER (U2)

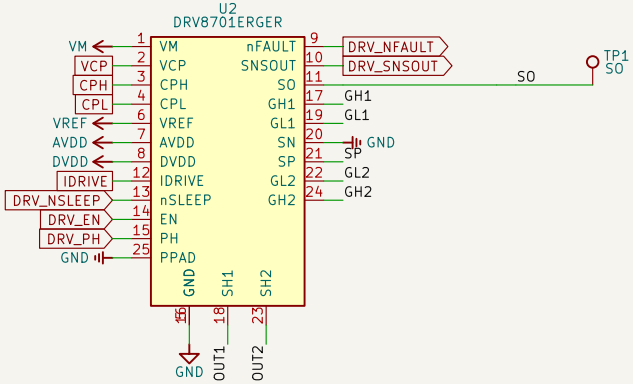

Generated from the netlist (run/state/circuit_graph.json) – do not edit by hand
Sheet: Battery input, AON6512 (Q2) and more
faezor PCB

Sheet: /Battery input, AON6512 (Q2) and more/		
File: board-battery-input-aon6512-q2-and-more.kicad_sch		
Title: Rover drive controller: STM32F411, 15 A H-bridge, 6 V servo supply		
Size: A4	Date: 2026-10-14	**Rev: 1**
KiCad E.D.A. 10.0.6		Id: 5/6

DRV8701ERGER (U2): support parts

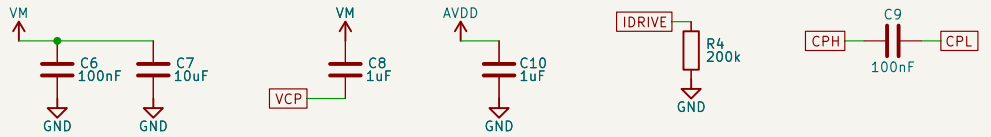

IMU

The LSM6DSO measures turning (gyro) and acceleration so the firmware can hold a heading. I2C1 on PB6/PB7 with 4.7k pull-ups, address 0x6A (SDO/SA0 to GND). INT1 goes to PA1. Mount the board flat so the gyro Z axis points up.

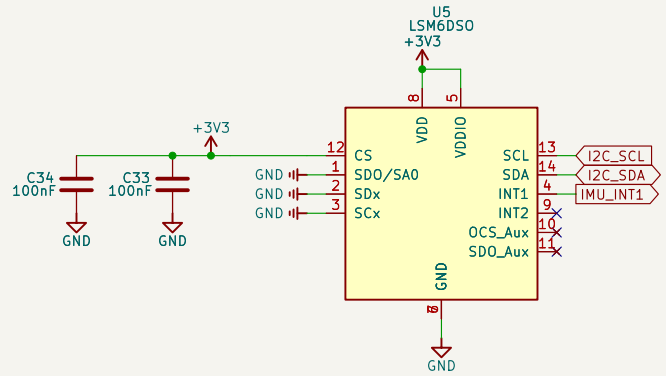

Servo and ESC outputs

Two 3-pin headers with a 50 Hz signal for the steering servo and for a brushless-motor ESC.
J5 (servo): 1 GND, 2 +6V, 3 signal (PA6, TIM3_CH1). J6 (ESC): 1 GND, 2 not connected, 3 signal (PB0, TIM3_CH3).
The ESC has its own battery leads - this board does not power it. 220 ohm series resistors protect the pins.

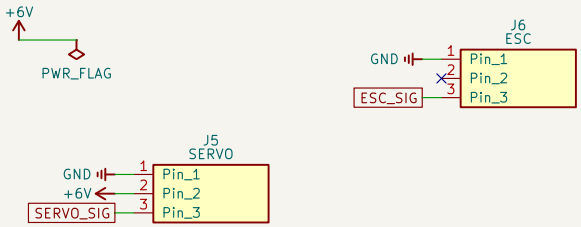

GPS and console headers

Two small headers for the GPS module and a USB-to-serial adapter.
J7 GPS (USART1, 38400 baud): 1 GND, 2 3V3, 3 board TX (PA9) to the GPS RX, 4 board RX (PA10) from the GPS TX. 3.3 V logic.
J8 console (USART2): 1 GND, 2 board TX (PA2), 3 board RX (PA3). 3.3 V logic only.

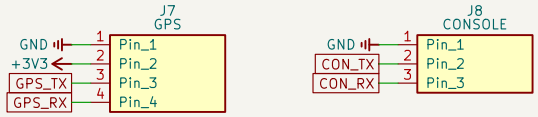

Status lights

Green RUN light and red FAULT light, driven by the chip.
Each light is lit while its pin is high (about 2.8 mA).

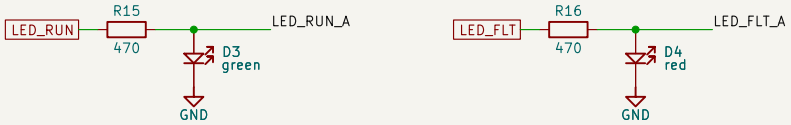

Generated from the netlist (run/state/circuit_graph.json) - do not edit by hand
Sheet: DRV8701ERGER (U2), IMU and more
faezor PCB

Sheet: /DRV8701ERGER (U2), IMU and more/		
File: board-drv8701erger-u2-imu-and-more.kicad_sch		
Title: Rover drive controller: STM32F411, 15 A H-bridge, 6 V servo supply		
Size: A4	Date: 2026-10-14	**Rev: 1**
KiCad E.D.A. 10.0.6		Id: 6/6